IIT KHARAGPUR

NPTEL ONLINE CERTIFICATION COURSES

Introduction to IoT – Part I

Dr. Sudip Misra
Associate Professor
Department of Computer Science and Engineering
IIT KHARAGPUR
Email: smisra@sit.iitkgp.ernet.in
Website: http://cse.iitkgp.ac.in/~smisra/

NPTEL

IoT

- ✓ Internet technology connecting devices, machines and tools to the internet by means of wireless technologies.
- ✓ Over 9 billion ‘Things’ connected to the Internet, as of now.
- ✓ ‘Things’ connected to the Internet are projected to cross 20 billion in the near future.
- ✓ Unification of technologies such as low-power embedded systems, cloud computing, big-data, machine learning, and networking.

NPTEL

Origin of Terminology

In the 2000s, we are heading into a new era of ubiquity, where the "users" of the Internet will be counted in billions and where humans may become the minority as generators and receivers of traffic. Instead, most of the traffic will flow between devices and all kinds of "things", thereby creating a much wider and more complex Internet of Things.

("The Internet of Things", ITU Internet Report 2005)

NPTEL

- ✓ The title of the report was “Internet of Things”
- ✓ Discussed the possibility of internet connected M2M connectivity networks, extending to common household devices.
- ✓ Some areas identified as IoT enablers:
  - RFID,
  - Nanotechnology,
  - Sensors,
  - Smart Networks.

NPTEL

Reference: International Telecommunications Union (ITU). (2005). *The Internet of Things. Executive Summary [Online]*

Alternate Definition

The Internet of Things (IoT) is the network of physical objects that contain embedded technology to communicate and sense or interact with their internal states or the external environment.

Gartner Research

Reference: http://www.gartner.com/it-glossary/internet-of-things/

NPTEL

Characteristics

- ✓ Efficient, scalable and associated architecture
- ✓ Unambiguous naming and addressing
- ✓ Abundance of sleeping nodes, mobile and non-IP devices
- ✓ Intermittent connectivity

NPTEL

Reference: Teemu Savolainen, Jonne Soininen, and Bilhanan Silverajan,*"IPv6 Addressing Strategies for IoT"*, IEEE SENSORS JOURNAL, VOL. 13, NO. 10, OCTOBER 2013

IoT Market Share

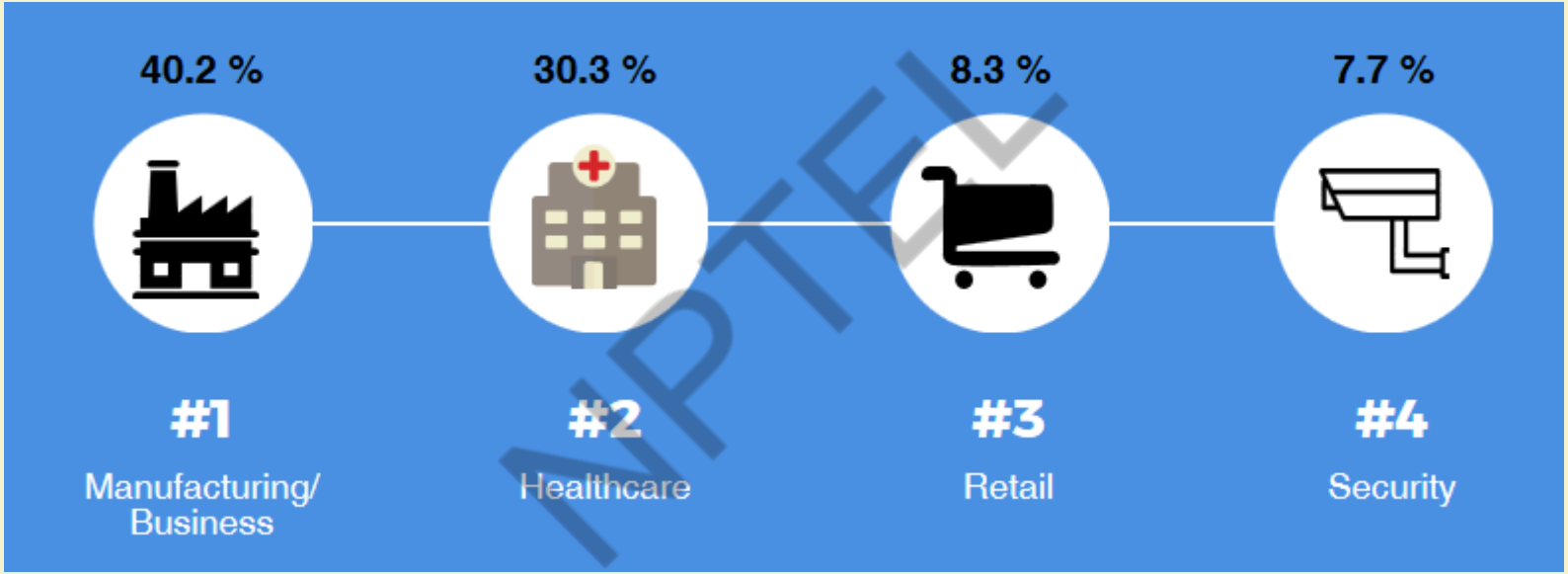

Source: Intel

- ✓ Business/Manufacturing
  - Real-time analytics of supply chains and equipment, robotic machinery.
- ✓ Healthcare
  - Portable health monitoring, electronic recordkeeping, pharmaceutical safeguards.
- ✓ Retail
  - Inventory tracking, smartphone purchasing, anonymous analytics of consumer choices.
- ✓ Security
  - Biometric and facial recognition locks, remote sensors.

NPTEL

Evolution of Connected Devices

NPTEL

- ✓ ATM
  - These ubiquitous money dispensers went online for the first time way back in 1974.
- ✓ WEB
  - World Wide Web made its debut in 1991 to revolutionize computing and communications.
- ✓ SMART METERS
  - The first power meters to communicate remotely with the grid were installed in the early 2000s.
- ✓ DIGITAL LOCKS
  - Smartphones can be used to lock and unlock doors remotely, and business owners can change key codes rapidly to grant or restrict access to employees and guests.

NPTEL

- ✓ SMART HEALTHCARE
  - Devices connect to hospitals, doctors and relatives to alert them of medical emergencies and take preventive measures.
- ✓ SMART VEHICLES
  - Vehicles self-diagnose themselves and alert owners about system failures.
- ✓ SMART CITIES
  - City-wide infrastructure communicating amongst themselves for unified and synchronized operations and information dissemination.
- ✓ SMART DUST
  - Computers smaller than a grain of sand can be sprayed or injected almost anywhere to measure chemicals in the soil or to diagnose problems in the human body.

NPTEL

Modern Day IoT Applications

- ✓ Smart Parking
- ✓ Structural health
- ✓ Noise Urban Maps
- ✓ Smartphone Detection
- ✓ Traffic Congestion
- ✓ Smart Lighting
- ✓ Waste Management
- ✓ Smart Roads
- ✓ River Floods
- ✓ Smart Grid
- ✓ Tank level
- ✓ Photovoltaic Installations
- ✓ Water Flow
- ✓ Silos Stock Calculation
- ✓ Perimeter Access Control
- ✓ Liquid Presence

NPTEL

Modern Day IoT Applications

- ✓ Forest Fire Detection
- ✓ Air Pollution
- ✓ Snow Level Monitoring
- ✓ Landslide and Avalanche Prevention
- ✓ Earthquake Early Detection
- ✓ Water Leakages
- ✓ Radiation Levels
- ✓ Explosive and Hazardous Gases
- ✓ Supply Chain Control
- ✓ NFC Payment
- ✓ Intelligent Shopping Applications
- ✓ Smart Product Management

NPTEL

Expected!!

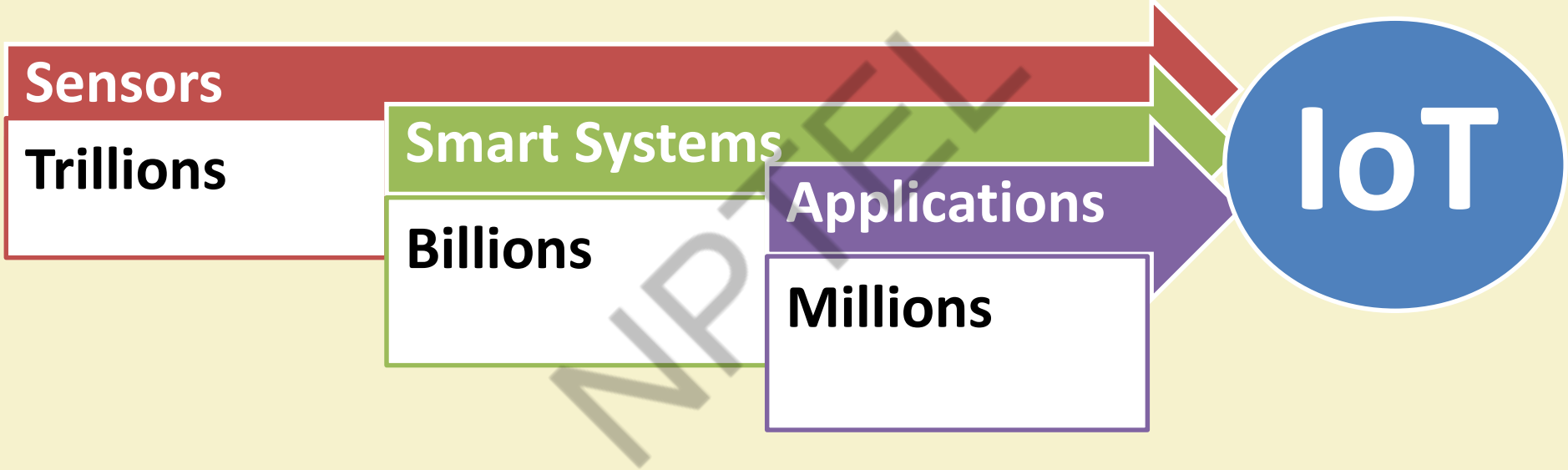

NPTEL

IoT Enablers

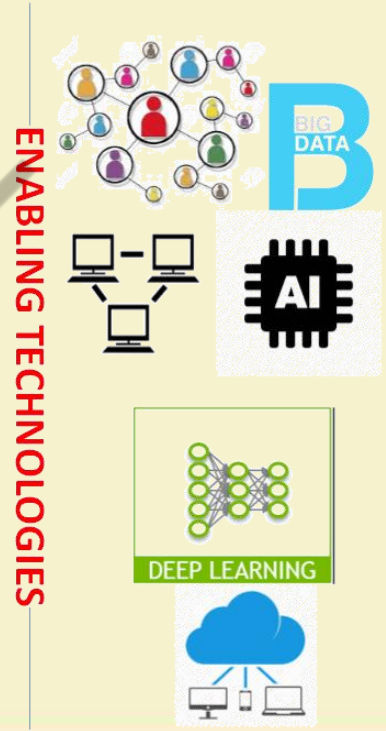

NPTEL

Connectivity Layers

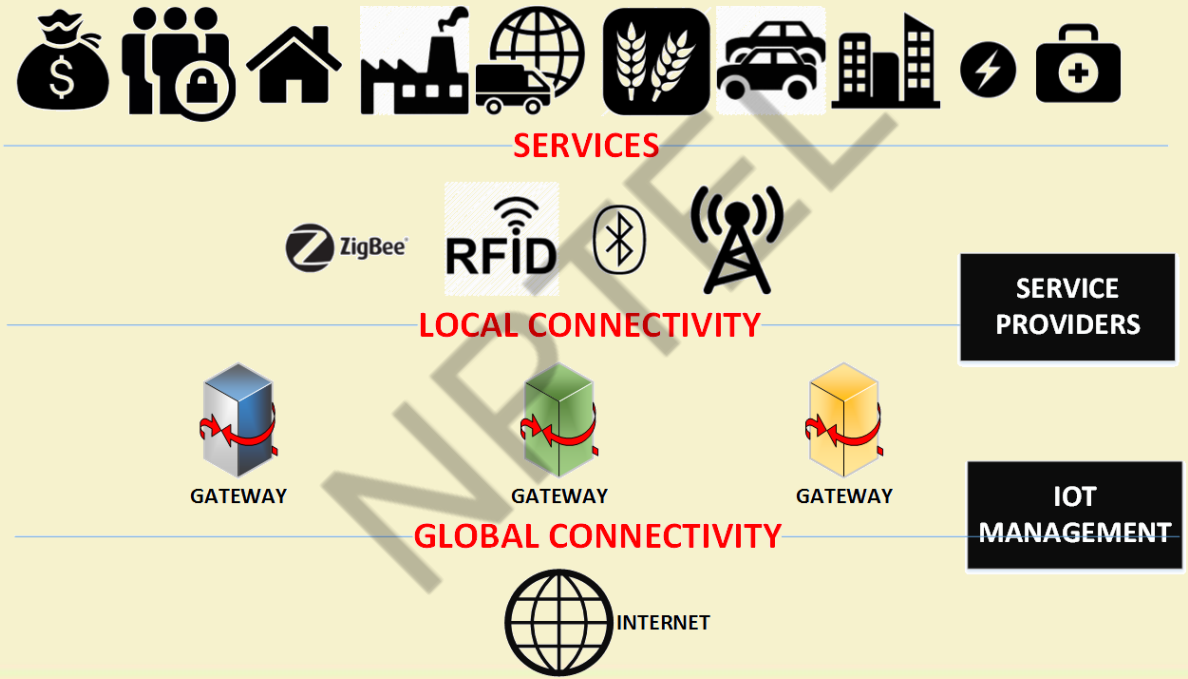

NPTEL

Baseline Technologies

- ✓ A number of technologies that are very closely related to IoT include
  - Machine-to-Machine (M2M) communications,
  - Cyber-Physical-Systems (CPS)
  - Web-of-Things (WoT).

NPTEL

IoT vs. M2M

- ✓ M2M refers to communications and interactions between machines and devices.
- ✓ Such interactions can occur via a cloud computing infrastructure (e.g., devices exchanging information through a cloud infrastructure).
- ✓ M2M offers the means for managing devices and devices interaction, while also collecting machine and/or sensor data.
- ✓ M2M is a term introduced by telecommunication services providers and, pays emphasis on machines interactions via one or more telcom/communication networks (e.g., 3G, 4G, 5G, satellite, public networks).

NPTEL

IoT vs. M2M

- ✓ **M2M is part of the IoT, while M2M standards have a prominent place in the IoT standards landscape.**
- ✓ However, IoT has a broader scope than M2M, since it comprises a broader range of interactions, including interactions between devices/things, things and people, things with applications and people with applications.
- ✓ It also enables the composition of workflows comprising all of the above interactions.
- ✓ IoT includes the notion of internet connectivity (which is provided in most of the networks outlined above), but is not necessarily focused on the use of telcom networks.

NPTEL

IoT vs. WoT

- ✓ From a developer's perspective, the WoT enables access and control over IoT resources and applications using mainstream web technologies (such as HTML 5.0, JavaScript, Ajax, PHP, Ruby n' Rails etc.).
  - The approach to building WoT is therefore based on RESTful principles and REST APIs, which enable both developers and deployers to benefit from the popularity and maturity of web technologies.
  - Still, building the WoT has various scalability, security etc. challenges, especially as part of a roadmap towards a global WoT.

NPTEL

IoT vs. WoT

- ✓ While IoT is about creating a network of objects, things, people, systems and applications, WoT tries to integrate them to the Web.

- ✓ Technically speaking, WoT can be thought as a flavour/option of an application layer added over the IoT's network layer. However, the scope of IoT applications is broader and includes systems that are not accessible through the web (e.g., conventional WSN and RFID systems).

NPTEL

Terminological Interdependence

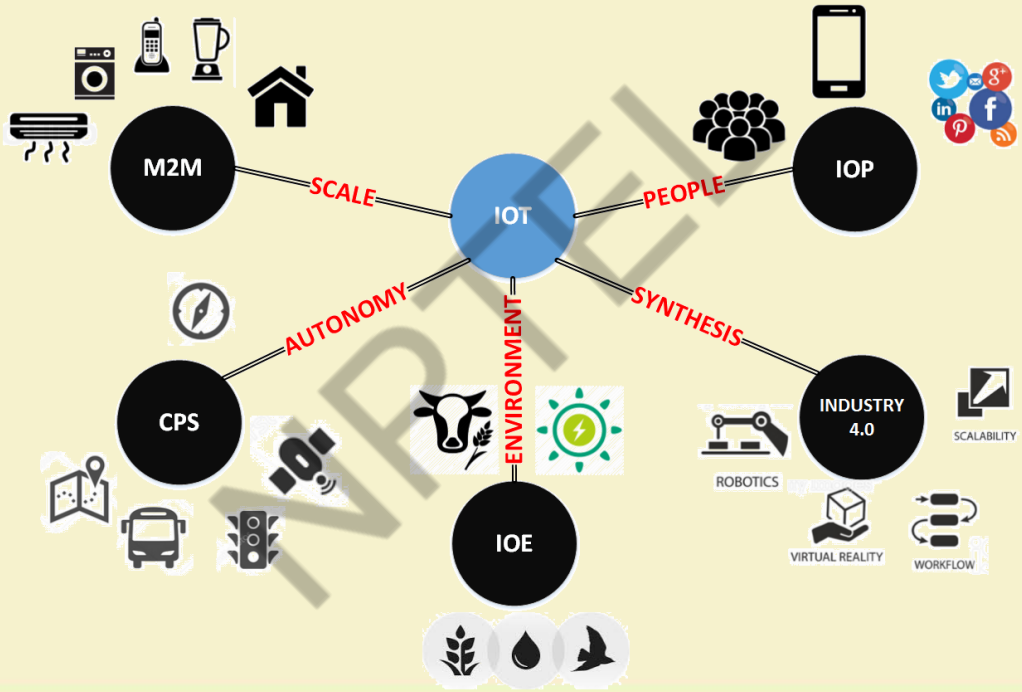

Thank You!!

NPTEL

IIT KHARAGPUR

NPTEL ONLINE CERTIFICATION COURSES

Introduction to IoT – Part II

Dr. Sudip Misra
Associate Professor
Department of Computer Science and Engineering
IIT KHARAGPUR
Email: smisra@sit.iitkgp.ernet.in
Website: http://cse.iitkgp.ac.in/~smisra/

NPTEL

IoT Resulting in Address Crunch

- ✓ Estimated 20-50 billion devices by 2018
- ✓ Reason is the integration of existing devices, smart devices as well as constrained nodes in a singular framework.
- ✓ Integration of various connectivity features such as cellular, Wi-Fi, ethernet with upcoming ones such as Bluetooth Low Energy (BLE), DASH7, Insteon, IEEE 802.15.4, etc.
- ✓ The ITU vision is approaching reality as the present day networked devices have outnumbered humans on earth.

NPTEL

Reference:

- ✓ Cisco Systems, (2011). *The Internet of Things How the Next Evolution of the Internet Is Changing Everything* [Online]. Available: http://www.cisco.com/web/about/ac79/docs/innov/IoT_IBSG_0411FINAL.pdf
- ✓ ITU Broadband Commission, (2012). *The State of Broadband 2012: Achieving Digital Inclusion for All ITU Broadband Commission Report, [Online]. Available: http://www.broadbandcommission.org/* Documents/bbannualreport2012.pdf
- ✓ Ericsson, (2011). *More than 50 Billion Connected Devices,* [Online]. Available: http://www.ericsson.com/res/docs/whitepapers/wp-50billions.pdf

Connectivity Terminologies

IoT LAN	•Local, Short range Comm, May or may not connect to Internet, Building or Organization wide
IoT WAN	•Connection of various network segments, Organizationally and geographically wide, Connects to the internet
IoT Node	•Connected to other nodes inside a LAN via the IoT LAN, May be sometimes connected to the internet through a WAN directly
IoT Gateway	•A router connecting the IoT LAN to a WAN to the Internet, Can implement several LAN and WAN, Forwards packets between LAN and WAN on the IP layer
IoT Proxy	•Performs active application layer functions between IoT nodes and other entities

NPTEL

IoT Network Configurations

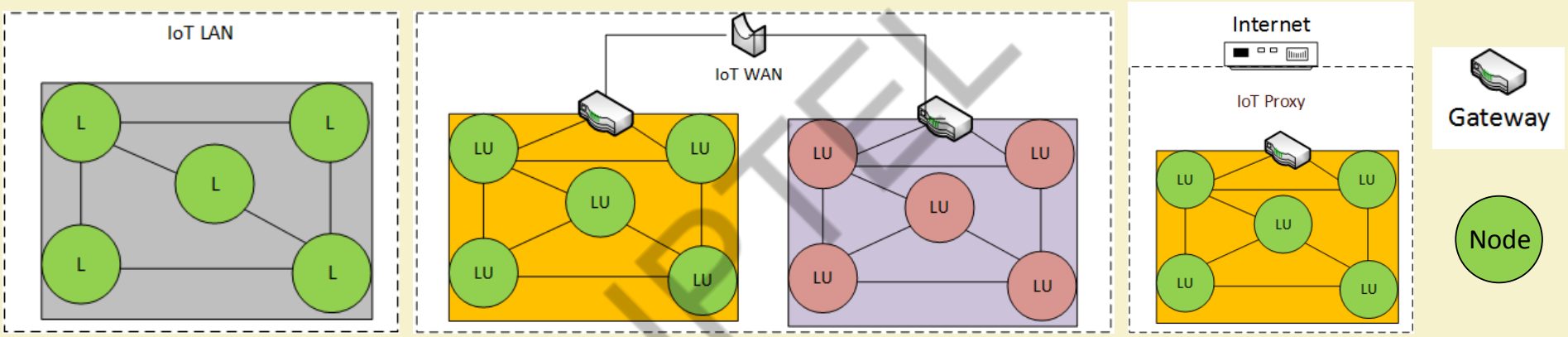

Source: Teemu Savolainen, Jonne Soininen, and Bilhanan Silverajan,*"IPv6 Addressing Strategies for IoT"*, IEEE Sensors Journal, Vol. 13, No. 10, Oct 2013

- ✓ Some of the IoT network configurations restricted to local areas, analogous to normal LANs, WANs and proxy are shown in the previous figures.
- ✓ The nodes represented by green circles have **L:** local link addresses or **LU**: local link addresses which are unique locally.
- ✓ Nodes within a gateway's jurisdiction have addresses that are valid within the gateway's domain only.
- ✓ The same addresses may be repeated in the domain of another gateway. The gateway has a unique network prefix, which can be used to identify them globally.
- ✓ This strategy saves a lot of unnecessary address wastage. Although, the nodes have to communicate to the internet via the gateway.

NPTEL

Gateway Prefix Allotment

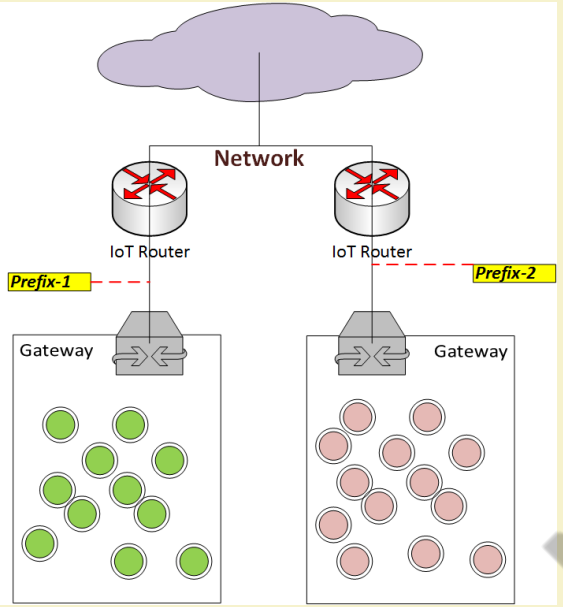

- ✓ One of the strategies of address conservation in IoT is to use local addresses which exist uniquely within the domain of the gateway. These are represented by the circles in this slide.
- ✓ The network connected to the internet has routers with their set of addresses and ranges.
- ✓ These routers have multiple gateways connected to them which can forward packets from the nodes, to the Internet, only via these routers. These routers assign prefixes to gateways under them, so that the gateways can be identified with them.

Source: Teemu Savolainen, Jonne Soininen, and Bilhanan Silverajan,*"IPv6 Addressing Strategies for IoT"*, IEEE Sensors Journal, Vol. 13, No. 10, Oct 2013

NPTEL

Impact of Mobility on Addressing

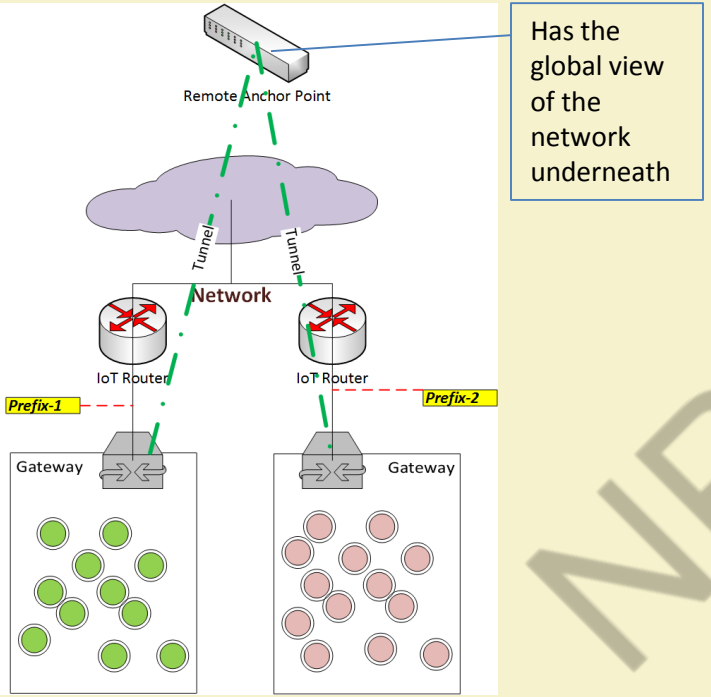

Has the global view of the network underneath

- ✓ The network prefix changes from 1 to 2 due to movement, making the IoT LAN safe from changes due to movements.
- ✓ IoT gateway <u>WAN address changes without change in LAN address</u>. This is achieved using ULA.

Source: Teemu Savolainen, Jonne Soininen, and Bilhanan Silverajan, *"IPv6 Addressing Strategies for IoT"*, IEEE Sensors Journal, Vol. 13, No. 10, Oct 2013

NPTEL

- ✓ The gateways assigned with prefixes, which are attached to a remote anchor point by using various protocols such as Mobile IPv6, and are immune to changes of network prefixes.
- ✓ This is achieved using LU. The address of the nodes within the gateways remain unchanged as the gateways provide them with locally unique address and the change in gateway's network prefix doesn't affect them.
- ✓ Sometimes, there is a need for the nodes to communicate directly to the internet. This is achieved by tunneling, where the nodes communicate to a remote anchor point instead of channeling their packets through the router which is achieved by using tunneling protocols such as IKEv2:internet key exchange version 2

NPTEL

Gateways

- ✓ IoT gateways with or without proxies responsible mainly for:
  - Internet connectivity
  - IoT LAN intra-connectivity
- ✓ Upstream address prefixes are obtained using mechanisms like DHCPv6 and delegated to the nodes using SLAAC (stateless addressing).
- ✓ LU addresses are maintained independently of globally routable addresses, in cases were internal address stability is of prime concern.

Source: Teemu Savolainen, Jonne Soininen, and Bilhanan Silverajan, *"IPv6 Addressing Strategies for IoT"*, IEEE Sensors Journal, Vol. 13, No. 10, Oct 2013

NPTEL

- ✓ Despite providing address stability, LUcannot communicate directly with the internet or the upper layers, which is solved by implementing an application layer proxy.
- ✓ Application layer proxies may be additionally configured to process data, rather than just passing it.
- ✓ In nodes with no support for computationally intensive tasks, IoT proxy gathers data sent to the link-local multicast address and routes them globally.

NPTEL

- ✓ Presently, the Internet is mainly IPv4, based with little or no IPv6 uplink facilities or support.
- ✓ Due to the lack of a universal transition solution to IPv6, lots of un-optimized solutions are being used for IoT deployment.
- ✓ These makeshift solutions mainly address:
  - IPv6 to IPv4 translation
  - IPv6 tunneling over IPv4
  - Application layer proxies (e.g: data relaying)

NPTEL

Multi-homing

- ✓ A node/network connected to multiple networks for improved reliability.
- ✓ In cases of small IoT LANs, where allotment of address prefixes is not feasible and possible, a proxy based approach is used to manage multiple IP addresses and map them to link local addresses.
- ✓ In another, gateway-based approach is used for assigning link local addresses to the nodes under it.

Source: Teemu Savolainen, Jonne Soininen, and Bilhanan Silverajan, *"IPv6 Addressing Strategies for IoT"*, IEEE Sensors Journal, Vol. 13, No. 10, Oct 2013

NPTEL

- ✓ Providing source addresses, destination addresses and routing information to the multi-homed nodes is the real challenge in multi-homing networks.
- ✓ In case the destination and source addresses originate from the same prefix, routing between gateways can be employed for IoT gateway selection.
- ✓ Presently, IEFT is still trying to standardize this issue.

NPTEL

IPv4 versus IPv6

	IPv4	IPv6
Developed	IETF 1974	IEF 1998
Length (bits)	32	128
No. of Addresses	2^32	2^128
Notation	Dotted Decimal	Hexadecimal
Dynamic Allocation of addresses	DHCP	SLAAC/ DHCPv6
IPSec	Optional	Compulsory

NPTEL

IPv4 versus IPv6

	IPv4	IPv6
Header Size	Variable	Fixed
Header Checksum	Yes	No
Header Options	Yes	No
Broadcast Addresses	Yes	No
Multicast Address	No	Yes

NPTEL

IPv4 Header Format

1 2 3 4	5 6 7 8	1 2 3 4 5 6 7 8	1 2 3 4 5 6 7 8 1 2 3 4 5 6 7 8
Ver	IHL	Type of Service	Total Length
Identification			Flags / Fragment Offset
Time to Live		Protocol	Header Checksum
Source Address (32 bit)			
Destination Address (32 bit)			
Options			Padding

NPTEL

IPv4

- ✓ The IPv4 emphasizes more on reliable transmission, as is evident by fields such as type of service, total length, id, offset, TTL, checksum fields.

NPTEL

IPv6 Header Format

1	2	3	4	5	6	7	8	1	2	3	4	5	6	7	8	1	2	3	4	5	6	7	8	1	2	3	4	5	6	7	8
Ver			Traffic Class									Flow Label																			
Payload Length																		Next Header									Hop Limit				
Source Address (128 bit)																															
Destination Length (128 bit)																															

NPTEL

IPv6

- ✓ The IPv6 header structure is more simpler as it mainly focuses on the addressing part of the source and destination.
- ✓ It is concerned more with addressing than with reliability of data delivery.

NPTEL

Thank You!!

NPTEL

IIT KHARAGPUR

NPTEL ONLINE CERTIFICATION COURSES

Sensing

Dr. Sudip Misra
Associate Professor
Department of Computer Science and Engineering
IIT KHARAGPUR
Email: smisra@sit.iitkgp.ernet.in
Website: http://cse.iitkgp.ac.in/~smisra/

NPTEL

Definition

- ✓ A sensor detects (senses) changes in the ambient conditions or in the state of another device or a system, and forwards or processes this information in a certain manner [1].

"A device which detects or measures a physical property and records, indicates, or otherwise responds to it" [2].

- Oxford Dictionary

References:

1. http://www.businessdictionary.com/definition/sensor.html
2. https://en.oxforddictionaries.com/definition/sensor

NPTEL

Sensors

- ✓ They perform some input functions by sensing or feeling the physical changes in characteristics of a system in response to a stimuli.
- ✓ For example heat is converted to electrical signals in a temperature sensor, or atmospheric pressure is converted to electrical signals in a barometer.

NPTEL

Transducers

- ✓ Transducers convert or transduce energy of one kind into another.
- ✓ For example, in a sound system, a microphone (input device) converts sound waves into electrical signals for an amplifier to amplify (a process), and a loudspeaker (output device) converts these electrical signals back into sound waves.

NPTEL

Sensor vs. Transducer

- ✓ The word "Transducer" is the collective term used for both **Sensors** which can be used to sense a wide range of different energy forms such as movement, electrical signals, radiant energy, thermal or magnetic energy etc., and **Actuators** which can be used to switch voltages or currents [1].

NPTEL

References:
1. http://www.electronics-tutorials.ws/io/io_1.html

Sensor Features

- ✓ It is only sensitive to the measured property (e.g., A temperature sensor senses the ambient temperature of a room.)
- ✓ It is insensitive to any other property likely to be encountered in its application (e.g., A temperature sensor does not bother about light or pressure while sensing the temperature.)
- ✓ It does not influence the measured property (e.g., measuring the temperature does not reduce or increase the temperature).

NPTEL

Sensor Resolution

- ✓ The resolution of a sensor is the smallest change it can detect in the quantity that it is measuring.
- ✓ The resolution of a sensor with a digital output is usually the smallest resolution the digital output it is capable of processing.
- ✓ The more is the resolution of a sensor, the more accurate is its precision.
- ✓ A sensor's accuracy does not depend upon its resolution.

NPTEL

Sensor Classes

- Based on Output
  - Analog
  - Digital
- Based on Data type
  - Scalar
  - Vector/ Multimedia

NPTEL

Analog Sensors

- ✓ **Analog Sensors** produce a continuous output signal or voltage which is generally proportional to the quantity being measured.
- ✓ Physical quantities such as Temperature, Speed, Pressure, Displacement, Strain etc. are all analog quantities as they tend to be continuous in nature.
- ✓ For example, the temperature of a liquid can be measured using a thermometer or thermocouple (e.g. in geysers) which continuously responds to temperature changes as the liquid is heated up or cooled down.

NPTEL

Digital Sensors

- ✓ **Digital Sensors** produce discrete digital output signals or voltages that are a digital representation of the quantity being measured.
- ✓ Digital sensors produce a binary output signal in the form of a logic "1" or a logic "0", ("ON" or "OFF").
- ✓ Digital signal only produces discrete (non-continuous) values, which may be output as a single "bit" (serial transmission), or by combining the bits to produce a single "byte" output (parallel transmission).

NPTEL

Scalar Sensors

- ✓ **Scalar Sensors** produce output signal or voltage which is generally proportional to the magnitude of the quantity being measured.
- ✓ Physical quantities such as temperature, color, pressure, strain, etc. are all scalar quantities as only their magnitude is sufficient to convey an information.
- ✓ For example, the temperature of a room can be measured using a thermometer or thermocouple, which responds to temperature changes irrespective of the orientation of the sensor or its direction.

NPTEL

Vector Sensors

- ✓ **Vector Sensors** produce output signal or voltage which is generally proportional to the magnitude, direction, as well as the orientation of the quantity being measured.
- ✓ Physical quantities such as sound, image, velocity, acceleration, orientation, etc. are all vector quantities, as only their magnitude is not sufficient to convey the complete information.
- ✓ For example, the acceleration of a body can be measured using an accelerometer, which gives the components of acceleration of the body with respect to the x,y,z coordinate axes.

NPTEL

Sensor Types

Light	• Light Dependent resistor • Photo-diode
Temperature	• Thermocouple • Thermistor
Force	• Strain gauge • Pressure switch
Position	• Potentiometer, Encoders • Opto-coupler
Speed	• Reflective/ Opto-coupler • Doppler effect sensor
Sound	• Carbon Microphone • Piezoelectric Crystal
Chemical	• Liquid Chemical sensor • Gaseous chemical sensor

NPTEL

Pressure Sensor

Source: Wikimedia Commons

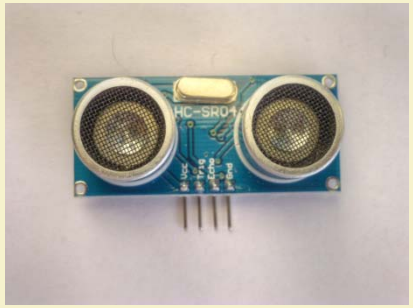

Ultrasonic Distance Sensor

Source: Wikimedia Commons

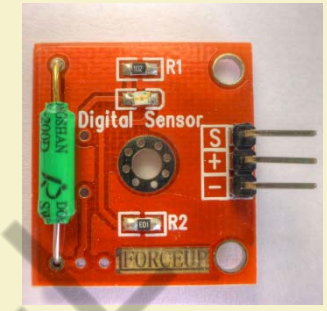

Tilt Sensor

Source: Wikimedia Commons

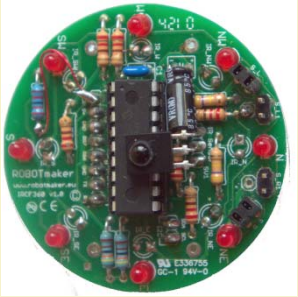

Infrared Motion Sensor

Source: Wikimedia Commons

Analog Temperature Sensor

Source: Wikimedia Commons

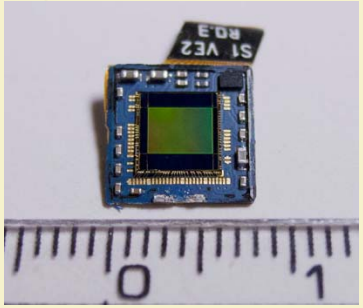

Camera Sensor

Source: Wikimedia Commons

NPTEL

Sensorial Deviations

- ✓ Since the range of the output signal is always limited, the output signal will eventually reach a minimum or maximum, when the measured property exceeds the limits. The full scale range of a sensor defines the maximum and minimum values of the measured property.
- ✓ The sensitivity of a sensor under real conditions may differ from the value specified. This is called a **sensitivity error**.
- ✓ If the output signal differs from the correct value by a constant, the sensor has an **offset error** or **bias**.

Reference: https://en.wikipedia.org/wiki/Sensor

NPTEL

Non-linearity

- ✓ Nonlinearity is deviation of a sensor's transfer function (TF) from a straight line transfer function.
- ✓ This is defined by the amount the output differs from ideal TF behavior over the full range of the sensor, which is denoted as the percentage of the full range.
- ✓ Most sensors have linear behavior.

NPTEL

Reference: https://en.wikipedia.org/wiki/Sensor

- ✓ If the output signal slowly changes independent of the measured property, this is defined as **drift**. Long term drift over months or years is caused by physical changes in the sensor.
- ✓ **Noise** is a random deviation of the signal that varies in time.

NPTEL

Reference: https://en.wikipedia.org/wiki/Sensor

Hysteresis Error

- ✓ A hysteresis error causes the sensor output value to vary depending on the sensor's previous input values.
- ✓ If a sensor's output is different depending on whether a specific input value was reached by increasing or decreasing the input, then the sensor has a hysteresis error.
- ✓ The present reading depends on the past input values.
- ✓ Typically in analog sensors, magnetic sensors, heating of metal strips.

Reference: https://en.wikipedia.org/wiki/Sensor

NPTEL

Other Errors

- ✓ If the sensor has a digital output, the output is essentially an approximation of the measured property. This error is also called **quantization error**.
- ✓ If the signal is monitored digitally, the sampling frequency can cause a dynamic error, or if the input variable or added noise changes periodically at a frequency proportional to the multiple of the sampling rate, **aliasing errors** may occur.
- ✓ The sensor may to some extent be sensitive to properties other than the property being measured. For example, most sensors are influenced by the temperature of their environment.

Reference: https://en.wikipedia.org/wiki/Sensor

NPTEL

Thank You!!

NPTEL

IIT KHARAGPUR

NPTEL ONLINE CERTIFICATION COURSES

Actuation

Dr. Sudip Misra
Associate Professor
Department of Computer Science and Engineering
IIT KHARAGPUR
Email: smisra@sit.iitkgp.ernet.in
Website: http://cse.iitkgp.ac.in/~smisra/

NPTEL

Actuator

- ✓ An actuator is a component of a machine or system that moves or controls the mechanism or the system.
- ✓ An actuator is the mechanism by which a control system acts upon an environment
- ✓ An actuator requires a control signal and a source of energy.

NPTEL

- ✓ Upon receiving a control signal is received, the actuator responds by converting the energy into mechanical motion.
- ✓ The control system can be simple (a fixed mechanical or electronic system), software-based (e.g. a printer driver, robot control system), a human, or any other input.

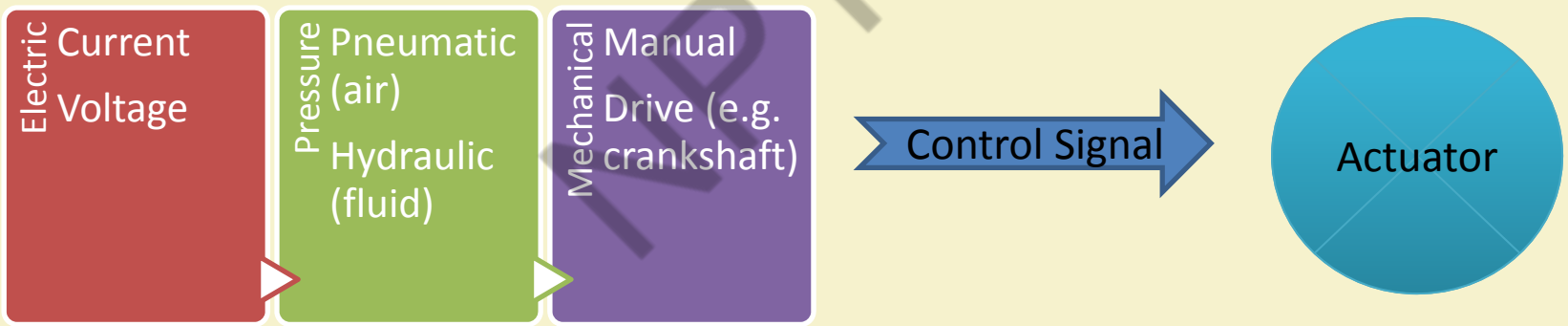

NPTEL

Actuator Types

- Hydraulic
- Pneumatic
- Electrical
- Thermal/ Magnetic
- Mechanical

NPTEL

Hydraulic Actuators

- ✓ A hydraulic actuator consists of a cylinder or fluid motor that uses hydraulic power to facilitate mechanical operation.
- ✓ The mechanical motion is converted to linear, rotary or oscillatory motion.
- ✓ Since liquids are nearly impossible to compress, a hydraulic actuator exerts considerable force.
- ✓ The actuator's limited acceleration restricts its usage.

Reference: https://en.wikipedia.org/wiki/Actuator

NPTEL

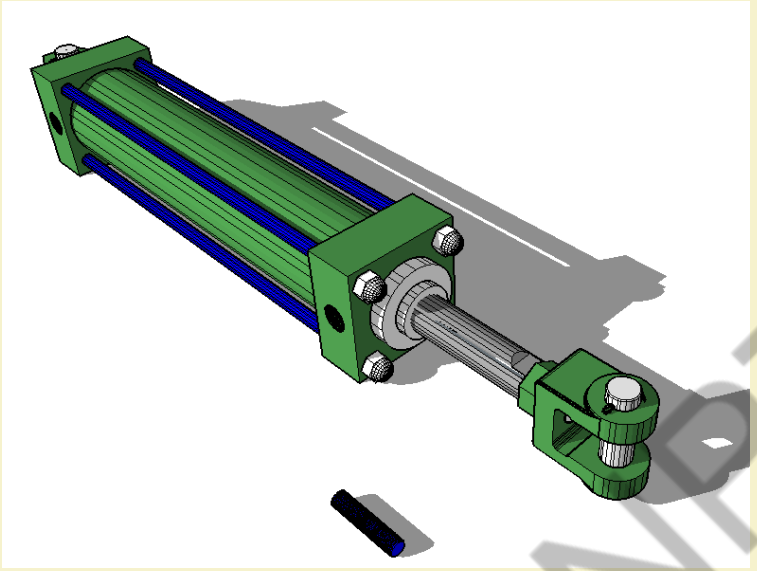

Fig: An oil based hydraulic actuator

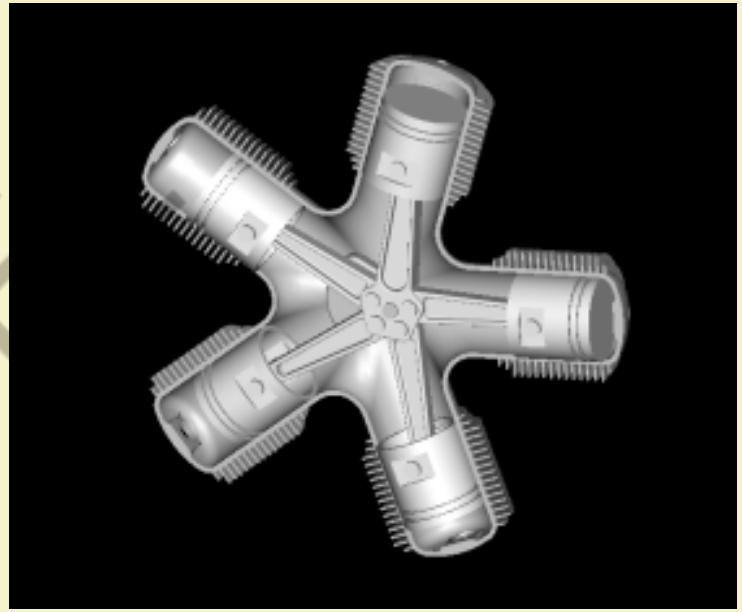

Fig: A radial engine acts as a hydraulic actuator
Source: Wikimedia Commons
File: Radial_engine.gif

Pneumatic Actuators

- ✓ A pneumatic actuator converts energy formed by vacuum or compressed air at high pressure into either linear or rotary motion.
- ✓ Pneumatic rack and pinion actuators are used for valve controls of water pipes.
- ✓ Pneumatic energy quickly responds to starting and stopping signals.
- ✓ The power source does not need to be stored in reserve for operation.

Reference: https://en.wikipedia.org/wiki/Actuator

NPTEL

- ✓ Pneumatic actuators enable large forces to be produced from relatively small pressure changes (e.g., Pneumatic brakes can are very responsive to small changes in pressure applied by the driver).
- ✓ It is responsible for converting pressure into force.

NPTEL

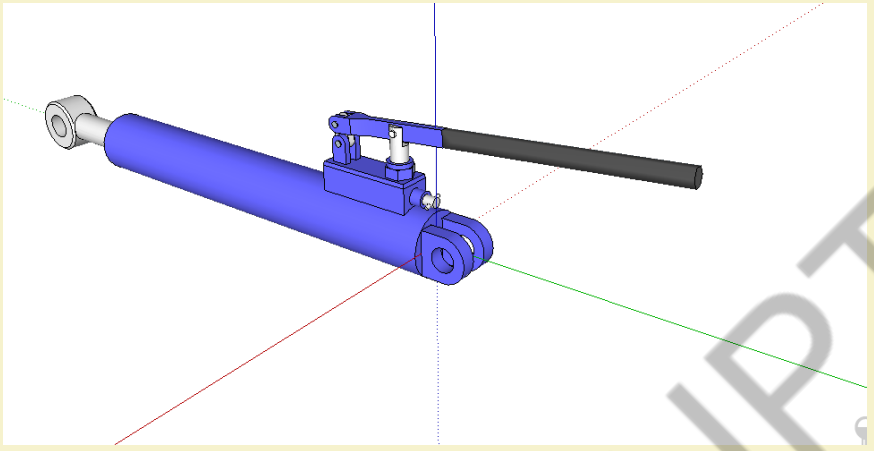

Fig: A manual linear pneumatic actuator

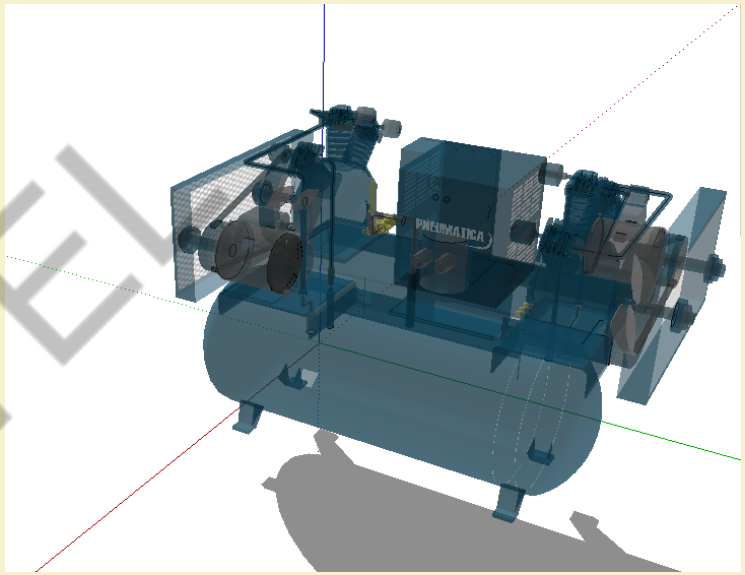

Fig: An air pump acts as a pneumatic actuator

NPTEL

Electric Actuators

- ✓ An electric actuator is generally powered by a motor that converts electrical energy into mechanical torque.
- ✓ The electrical energy is used to actuate equipment such as solenoid valves which control the flow of water in pipes in response to electrical signals.
- ✓ Considered as one of the cheapest, cleanest and speedy actuator types available.

Reference: https://en.wikipedia.org/wiki/Actuator

NPTEL

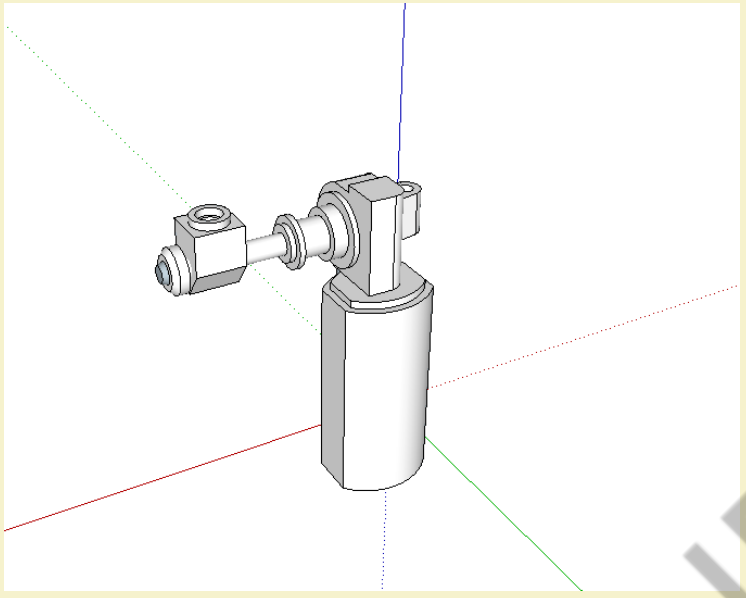

Fig: A motor drive-based rotary actuator

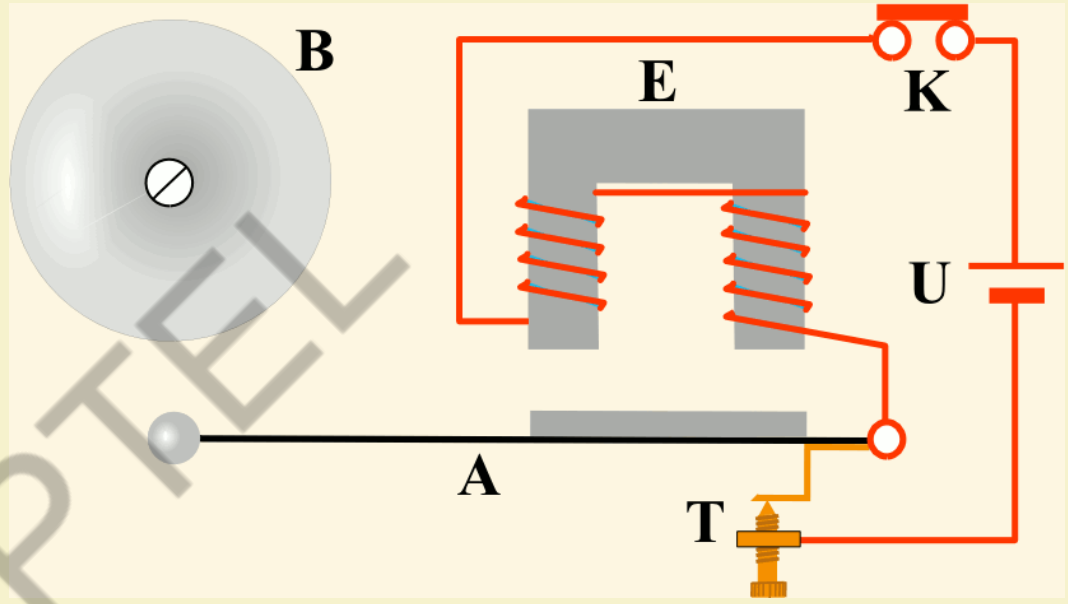

Fig: A solenoid based electric bell ringing mechanism

Source: Wikimedia Commons

File: Electric_Bell_animation.gif

NPTEL

Thermal or Magnetic Actuators

- ✓ These can be actuated by applying thermal or magnetic energy.
- ✓ They tend to be compact, lightweight, economical and with high power density.
- ✓ These actuators use shape memory materials (SMMs), such as shape memory alloys (SMAs) or magnetic shape-memory alloys (MSMAs).
- ✓ Some popular manufacturers of these devices are *Finnish Modti Inc.* and *American Dynalloy*.

Reference: https://en.wikipedia.org/wiki/Actuator

NPTEL

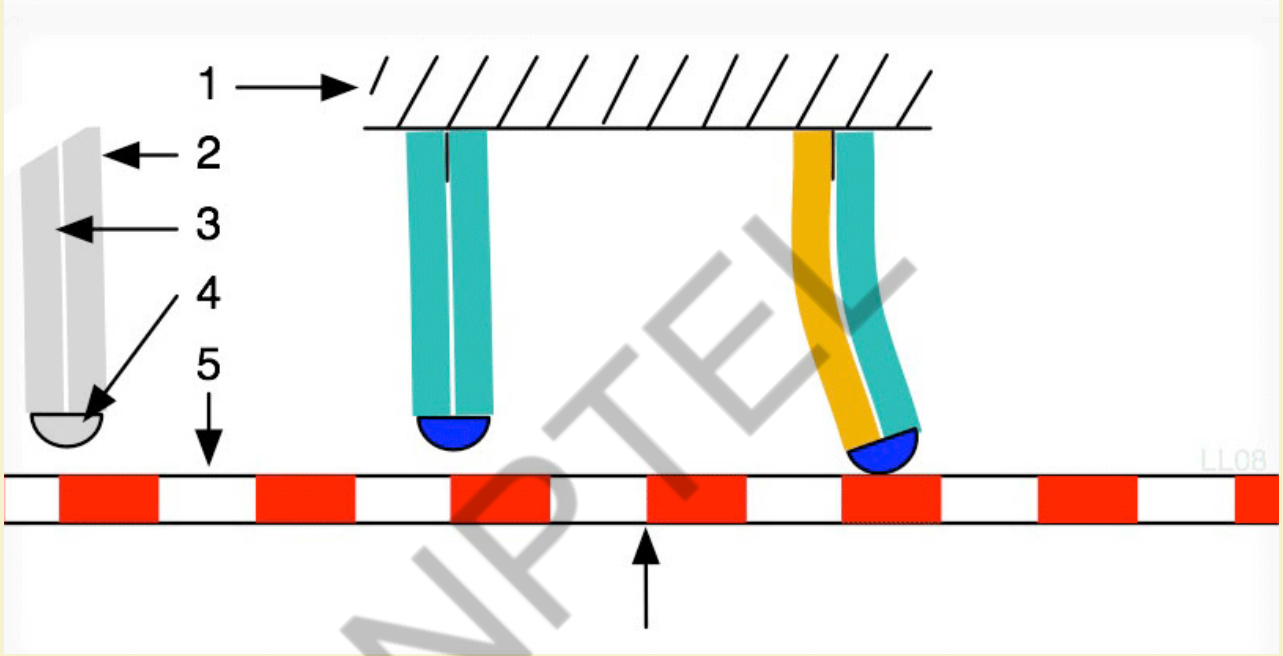

Fig: A piezo motor using SMA

Source: Wikimedia Commons
File: Piezomotor type bimorph.gif

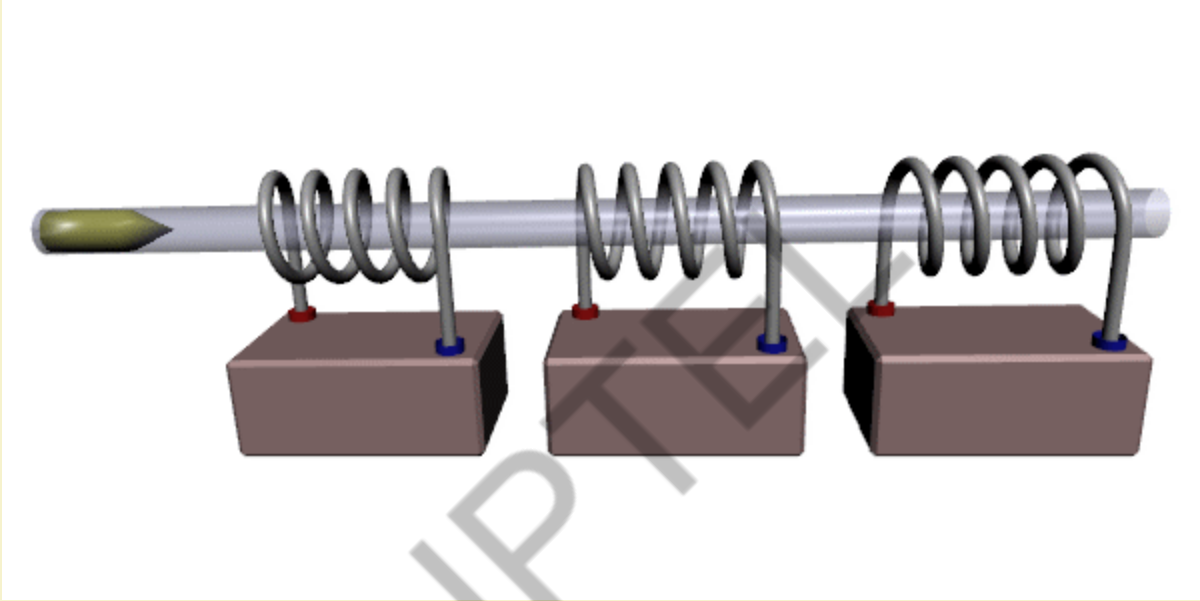

Fig: A coil gun works on the principle of magnetic actuation

Source: Wikimedia Commons
File: Coilgun animation.gif

NPTEL

Mechanical Actuators

- ✓ A mechanical actuator converts rotary motion into linear motion to execute some movement.
- ✓ It involves gears, rails, pulleys, chains and other devices to operate.
- ✓ Example: rack and pinion.

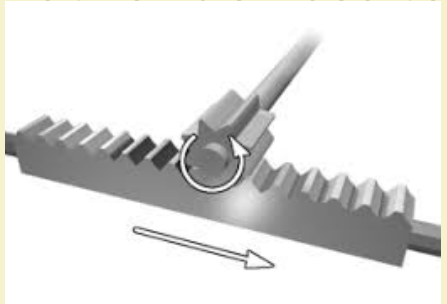

Fig: A rack and pinion mechanism
Source: Wikimedia Commons
File: Rack and pinion.png

Reference: https://en.wikipedia.org/wiki/Actuator

NPTEL

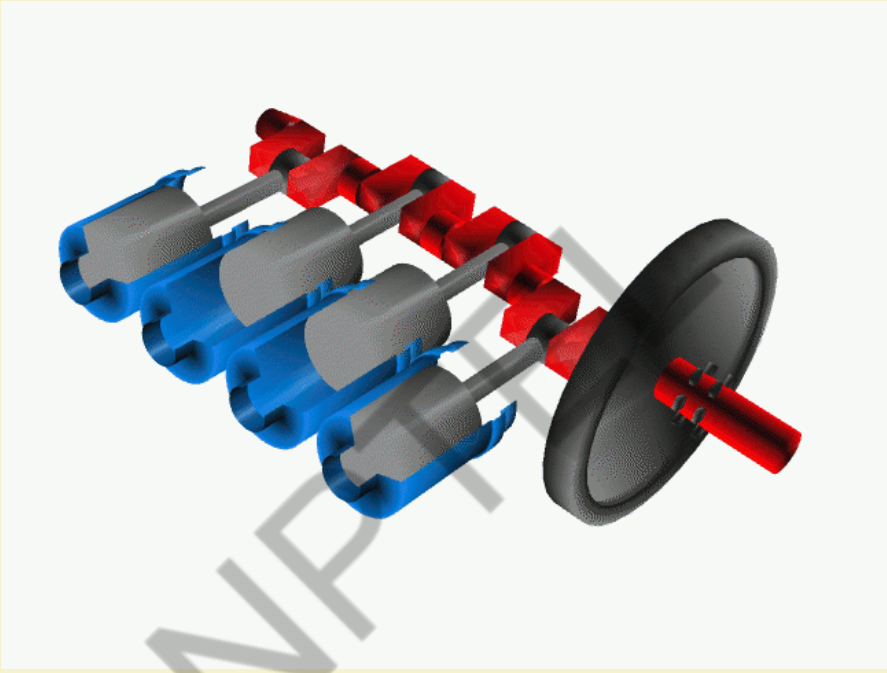

Fig: A crank shaft acting as a mechanical actuator

Source: Wikimedia Commons
File: Cshaft.gif

Soft Actuators

- ✓ Soft actuators (e.g. polymer based) are designed to handle fragile objects like fruit harvesting in agriculture or manipulating the internal organs in biomedicine.
- ✓ They typically address challenging tasks in robotics.
- ✓ Soft actuators produce flexible motion due to the integration of microscopic changes at the molecular level into a macroscopic deformation of the actuator materials.

Reference: https://en.wikipedia.org/wiki/Actuator

NPTEL

Shape Memory Polymers

- ✓ Shape memory polymer (SMP) actuators function similar to our muscles, even providing a response to a range of stimuli such as light, electrical, magnetic, heat, pH, and moisture changes.
- ✓ SMP exhibits surprising features such a low density, high strain recovery, biocompatibility, and biodegradability.

Reference: https://en.wikipedia.org/wiki/Actuator

NPTEL

Light Activated Polymers

- ✓ Photopolymer/light activated polymers (LAP) are a special type of SMP that are activated by light stimuli.
- ✓ The LAP actuators have instant response.
- ✓ They can be controlled remotely without any physical contact, only using the variation of light frequency or intensity.

Reference: https://en.wikipedia.org/wiki/Actuator

NPTEL

Thank You!!

NPTEL

IIT KHARAGPUR

NPTEL ONLINE CERTIFICATION COURSES

NPTEL

Basics of IoT Networking – Part I

Dr. Sudip Misra
Associate Professor
Department of Computer Science and Engineering
IIT KHARAGPUR
Email: smisra@sit.iitkgp.ernet.in
Website: http://cse.iitkgp.ac.in/~smisra/

NPTEL

Convergence of Domains

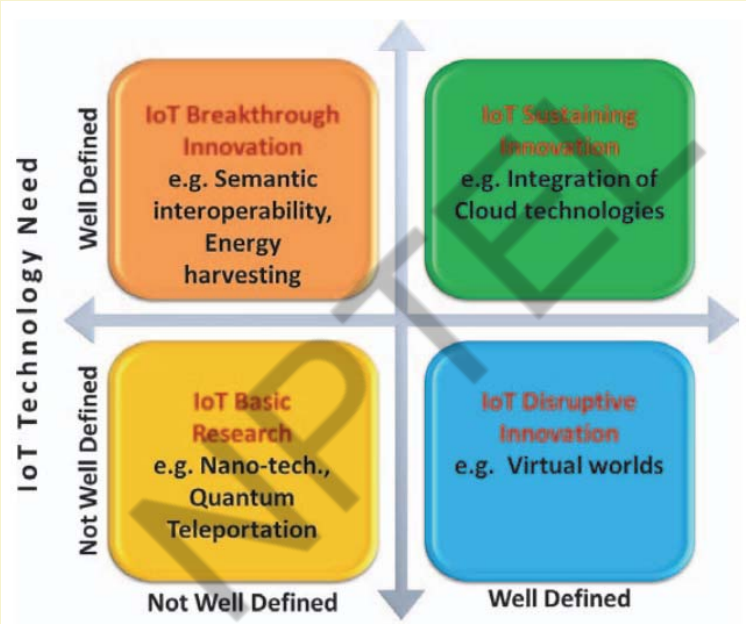

Source: O. Vermesan, P. Friess, "Internet of Things – Converging Technologies for Smart Environments and Integrated Ecosystems", River Publishers, Series in Communications, 2013

IoT Components

- Device (The Thing)
- Local Network
- Internet
- Backend Services
- Applications

NPTEL

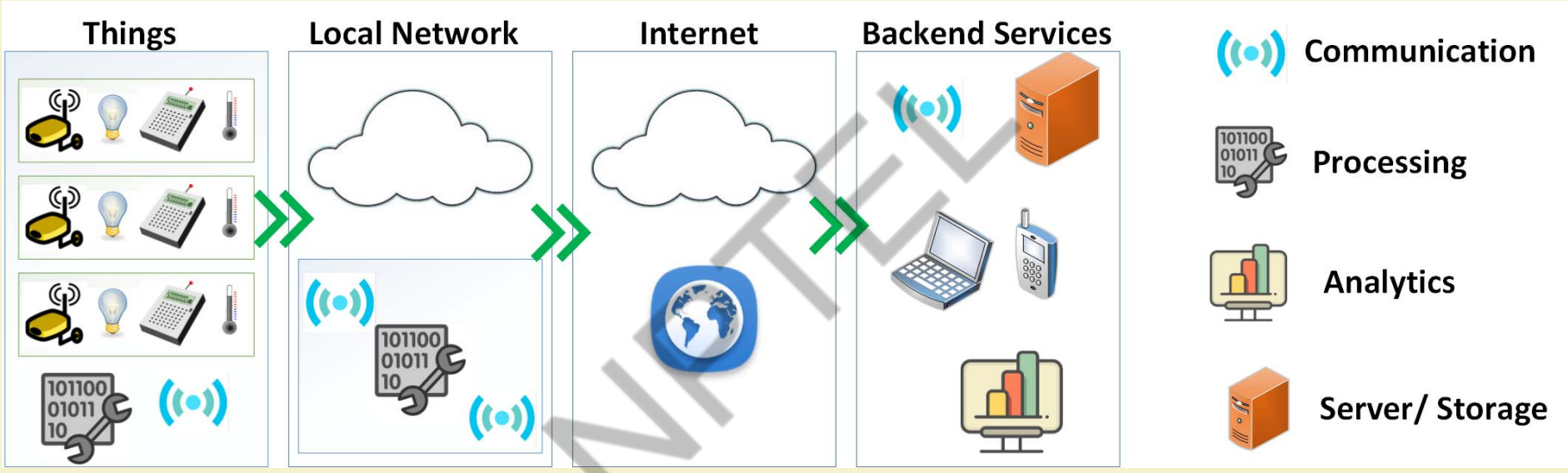
Things
Local Network
Internet
Backend Services
Communication
Processing
Analytics
Server/ Storage

Functional Components of IoT

- ✓ Component for interaction and communication with other IoT devices
- ✓ Component for processing and analysis of operations
- ✓ Component for Internet interaction
- ✓ Components for handling Web services of applications
- ✓ Component to integrate application services
- ✓ User interface to access IoT

Source: O Vermesan, P. Friess, "Internet of Things – Converging Technologies for Smart Environments and Integrated Ecosystems", River Publishers, Series in Communications, 2013

NPTEL

An Example IoT Implementation

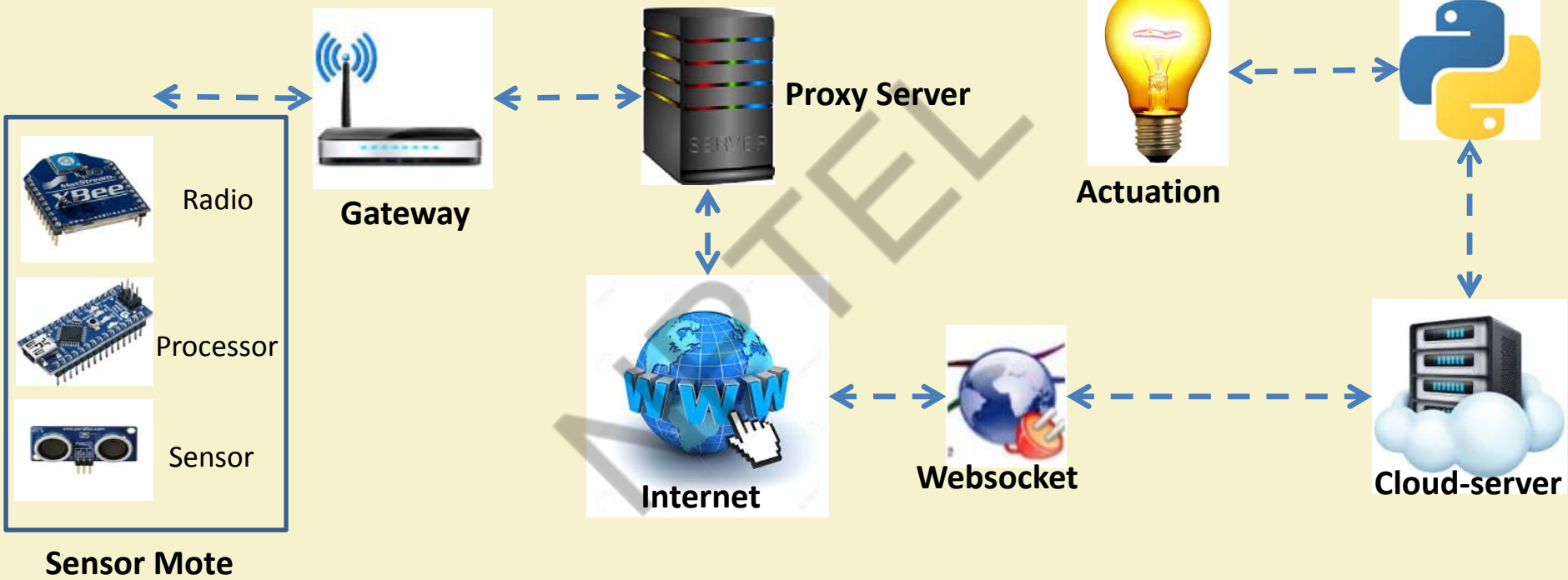

IoT Interdependencies

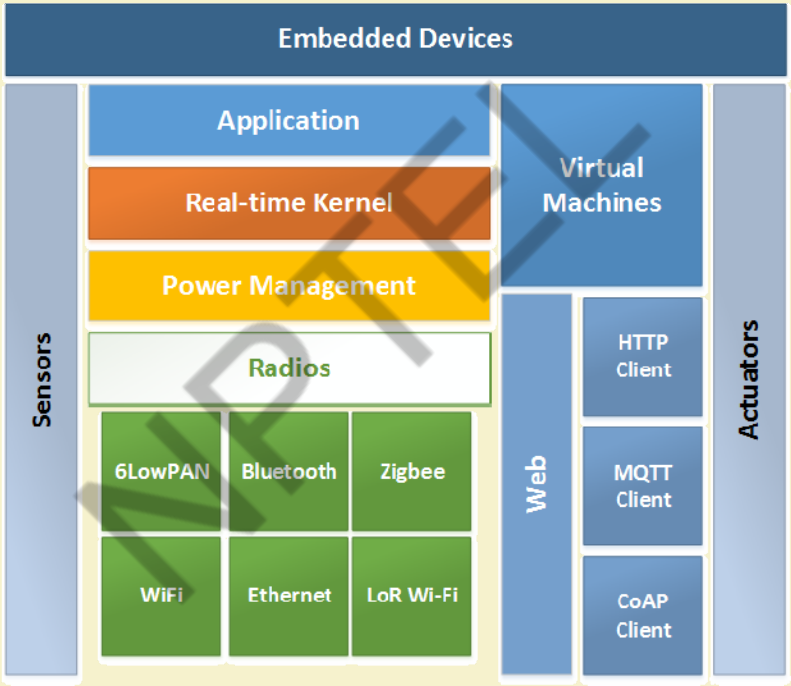

IoT Service Oriented Architecture

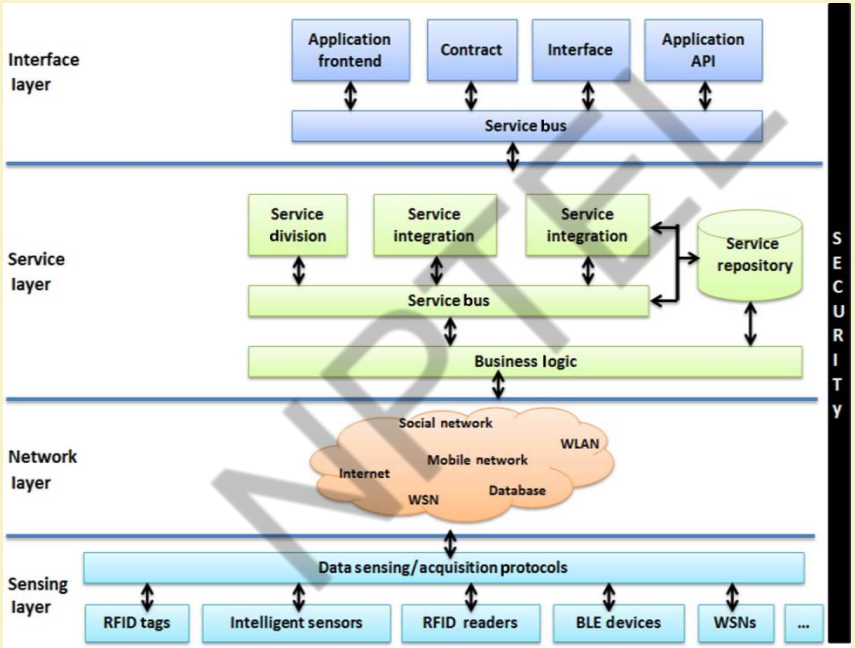

Source: Li Da Xu, Wu He, and Shancang Li, "Internet of Things in Industries: A Survey ", IEEE Transactions on Industrial Informatics, Vol. 10, No. 4, Nov. 2014.

IoT Categories

- ✓ **Industrial IoT**
  - IoT device connects to an IP network and the global Internet.
  - Communication between the nodes done using regular as well as industry specific technologies.
- ✓ **Consumer IoT**
  - IoT device communicates within the locally networked devices.
  - Local communication is done mainly via Bluetooth, Zigbee or WiFi.
  - Generally limited to local communication by a Gateway

NPTEL

IoT Gateways

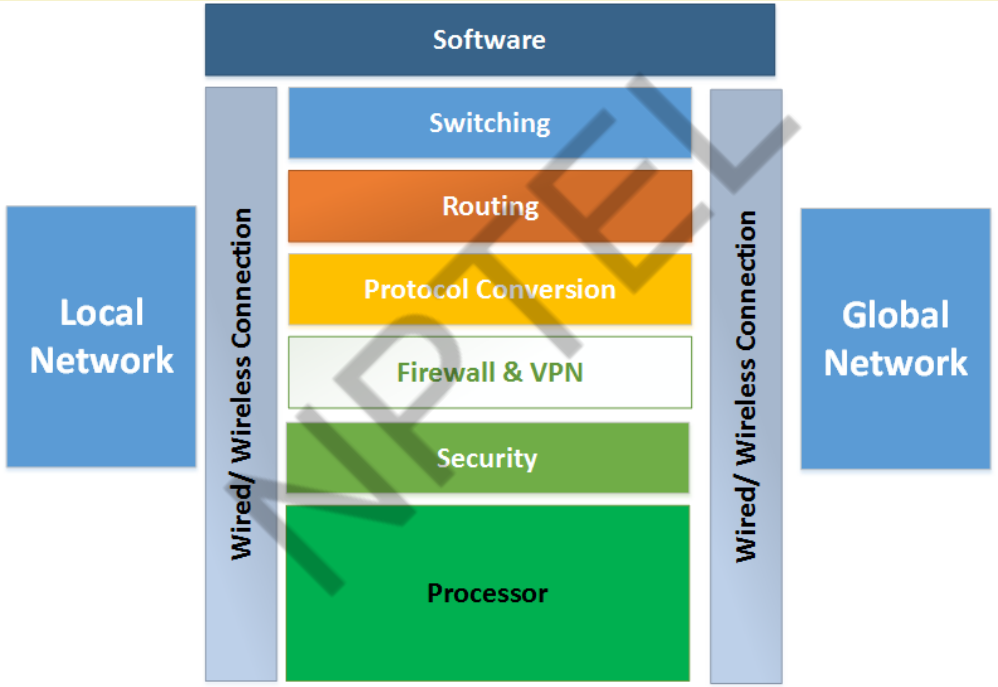

IoT and Associated Technologies

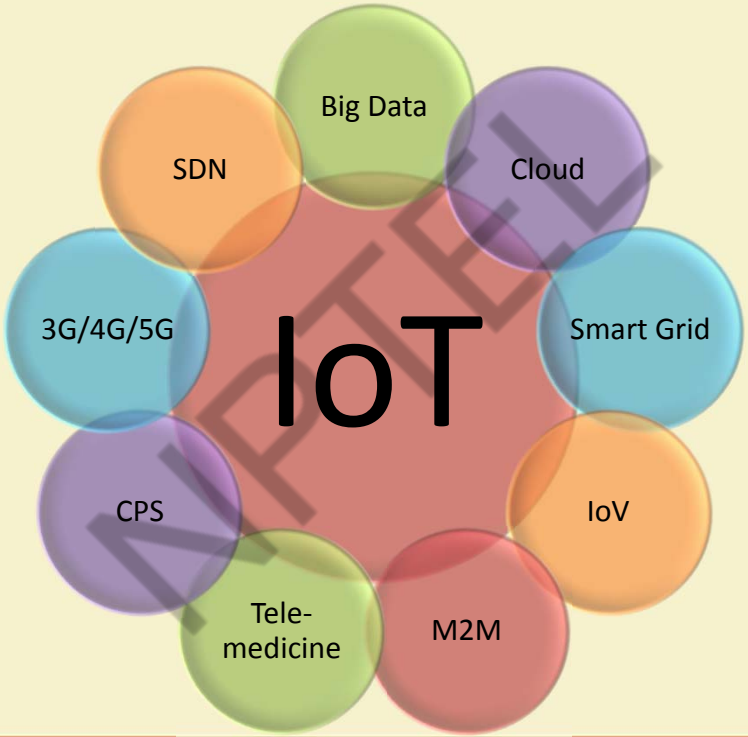

NPTEL

Technical Deviations from Regular Web

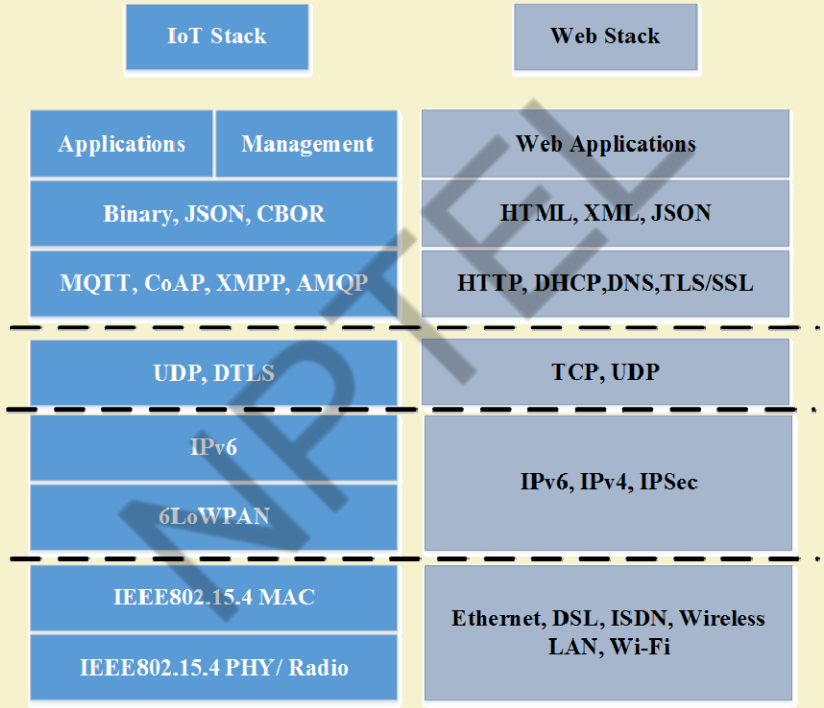

NPTEL

Key Technologies for IoT

Source: O Vermesan, P. Friess**, "**Internet of Things – Converging Technologies for Smart Environments and Integrated Ecosystems", River Publishers, Series in Communications, 2013

IoT Challenges

- ✓ Security
- ✓ Scalability
- ✓ Energy efficiency
- ✓ Bandwidth management
- ✓ Modeling and Analysis
- ✓ Interfacing
- ✓ Interoperability
- ✓ Data storage
- ✓ Data Analytics
- ✓ Complexity management (e.g., SDN)

NPTEL

Considerations

- ✓ Communication between the IoT device(s) and the outside world dictates the network architecture.
- ✓ Choice of communication technology dictates the IoT device hardware requirements and costs.
- ✓ Due to the presence of numerous applications of IoT enabled devices, a single networking paradigm not sufficient to address all the needs of the consumer or the IoT device.

NPTEL

Complexity of Networks

- ✓ Growth of networks
- ✓ Interference among devices
- ✓ Network management
- ✓ Heterogeneity in networks
- ✓ Protocol standardization within networks

NPTEL

Source: O Vermesan, P. Friess**, "**Internet of Things – Converging Technologies for Smart Environments and Integrated Ecosystems", River Publishers, Series in Communications, 2013

Wireless Networks

- Traffic and load management
- Variations in wireless networks – Wireless Body Area Networks and other Personal Area Networks
- Interoperability
- Network management
- Overlay networks

NPTEL

Source: O. Vermesan, P. Friess**, "**Internet of Things – Converging Technologies for Smart Environments and Integrated Ecosystems", River Publishers, Series in Communications, 2013

Scalability

- Flexibility within Internet
- IoT integration
- Large scale deployment
- Real-time connectivity of billions of devices

NPTEL

Thank You!!

NPTEL